Exterior Door Schedule - Add Alt

Door #	From Room	To Room	Door Type	Manufacturer	Series	Catalog No.	Operation	Size	Material	Frame Type	Throat	Label	Hdwr. Set No.	Remarks
First Floor														
F101	LOBBY	AUDITORIUM	A	STEELCRAFT	B-14	–	SWING	6'0" x 7'0"	STL	1	V.I.F.	---	1	PROVIDE REMOVABLE MULLION
F102	AUDITORIUM	ALLEY	A	STEELCRAFT	B-14	–	SWING	5'0" x 7'0"	STL	1	V.I.F.	---	1	PROVIDE REMOVABLE MULLION
F103	AUDITORIUM	ALLEY	A	STEELCRAFT	B-14	–	SWING	5'0" x 7'0"	STL	1	V.I.F.	---	1	PROVIDE REMOVABLE MULLION
F104	LOBBY	COURTYARD	A	STEELCRAFT	B-14	–	SWING	6'0" x 7'0"	STL	1	V.I.F.	---	1	PROVIDE REMOVABLE MULLION
F105	COURTYARD	ALLEY	A	STEELCRAFT	B-14	–	SWING	5'0" x 7'0"	STL	1	V.I.F.	---	1	PROVIDE REMOVABLE MULLION
F106	COURTYARD	ALLEY	A	STEELCRAFT	B-14	–	SWING	5'0" x 7'0"	STL	1	V.I.F.	---	1	PROVIDE REMOVABLE MULLION
Second Floor														
F107	MEZZANINE	COURTYARD	A	STEELCRAFT	B-14	–	SWING	5'0" x 7'0"	STL	1	V.I.F.	---	1	PROVIDE REMOVABLE MULLION
F108	MEZZANINE	ALLEY	A	STEELCRAFT	B-14	–	SWING	5'0" x 7'0"	STL	1	V.I.F.	---	1	PROVIDE REMOVABLE MULLION

Interior Door Schedule

Door #	From Room	To Room	Door Type	Manufacturer	Series	Catalog No.	Operation	Size	Material	Frame Type	Throat	Label	Hdwr. Set No.	Remarks
Basement														
001	EXIST RESTROOM FOYER	EXIST MEN'S RESTROOM	C	REEB	OVATION FLAT PANEL	7102	SWING	3'0" x 7'0"	MDF	–	V.I.F.	---	3	OGEE STICKING PROFILE
002	EXIST RESTROOM FOYER	EXIST WOMEN'S RESTROOM	C	REEB	OVATION FLAT PANEL	7102	SWING	3'0" x 7'0"	MDF	–	V.I.F.	---	3	OGEE STICKING PROFILE
003	EXIST RESTROOM FOYER	LAUNDRY CLOSET	B	REEB	OVATION FLAT PANEL	7102	SWING	5'0" x 7'0"	MDF	–	V.I.F.	---	5 FOR ACTIVE LEAF	PROVIDE FLUSH BOLT FOR DUMMY LEAF, AND OGEE STICKING PROFILE
004	EXIST RESTROOM FOYER	NEW STORAGE ROOM	C	REEB	OVATION FLAT PANEL	7102	SWING	3'0" x 7'0"	MDF	–	V.I.F.	---	6	PROVIDE STAINLESS STEEL KICK PLATE AND OGEE STICKING PROFILE
First Floor														
101	LOBBY	AUDITORIUM	B	ACOUSTICAL SURFACES	STUDIO 3D	STC RATING 56	SWING	6'0" x 6'11"	WOOD MAPLE	WOOD MAPLE	V.I.F.	---	2	PROVIDE STAINLESS STEEL KICK PLATE AND OGEE STICKING PROFILE
102	LOBBY	AUDITORIUM	B	ACOUSTICAL SURFACES	STUDIO 3D	STC RATING 56	SWING	6'0" x 6'11"	WOOD MAPLE	WOOD MAPLE	V.I.F.	---	2	PROVIDE STAINLESS STEEL KICK PLATE AND OGEE STICKING PROFILE
103	EXIST RESTROOM LOBBY	RESTROOM	C	REEB	OVATION FLAT PANEL	7102	SWING	3'0" x 7'0"	MDF	–	V.I.F.	---	3	OGEE STICKING PROFILE
104	EXIST RESTROOM LOBBY	RESTROOM	C	REEB	OVATION FLAT PANEL	7102	SWING	3'0" x 7'0"	MDF	–	V.I.F.	---	3	OGEE STICKING PROFILE
105	EXIST RESTROOM LOBBY	LIQUOR STORAGE	C	REEB	OVATION FLAT PANEL	7102	SWING	3'0" x 7'0"	MDF	–	V.I.F.	---	5	OGEE STICKING PROFILE
106	EXIST RESTROOM LOBBY	ART DISPLAY	D	REEB	FLAT PANEL	7102	SWING	2'6" x 7'0"	MDF	–	V.I.F.	---	7	
107	AUDITORIUM	STORAGE	D	REEB	FLAT PANEL	7102	SWING	2'0" x 4'6"	MDF	–	V.I.F.	---	4	
108	AUDITORIUM	STORAGE	D	REEB	FLAT PANEL	7102	SWING	2'0" x 4'6"	MDF	–	V.I.F.	---	4	
Second Floor														
201	MEZZANINE FOYER	STAFF BREAK ROOM	C	---	---	---	---	EXIST TO REMAIN	---	---	---	---	4	EXISTING DOOR TO REMAIN, PROVIDE NEW HARDWARE
202	MEZZANINE FOYER	RESTROOM	C	---	---	---	---	EXIST TO REMAIN	---	---	---	---	3	EXISTING DOOR TO REMAIN, PROVIDE NEW HARDWARE

Hardware Schedule

Hardware Set No. 1 - Exterior Exit Door

Item	Manufacturer	Catalog No.
LOCKSET	ALLEGION FALCON	24 SERIES, LATITUDE STYLE LEVER, US11 AGED BRONZE, LEVER TRIM (712L) AND IC KEY CYLINDER (C987) MORTISE CYLINDER
HINGES	REPUBLIC	BY DOOR MANUFACTURER, US11 AGED BRONZE
SILENCERS	GLYNN JOHNSON	GJ-64, AS REQUIRED
DOOR STOP	IVES	436 OR 438 FLOOR MOUNTED VERIFY IN FIELD, AGED BRONZE
CLOSER	LCN	1460 – 1 REQUIRED, NON HOLD OPEN, 695 DARK BRONZE
PANIC BAR	ALLEGION FALCON	24-R-L PANIC RIM EXIT DEVICE ENTRANCE BY LEVER, KEY LOCKS OR UNLOCKS KNOB, 299 STRIKE, US11 AGED BRONZE
SWEEPER	REPUBLIC	BY DOOR MANUFACTURER
THRESHOLD	PEMKO	ADA COMPLIANT ALUM THRESHOLD
REMOVABLE MULLION	ALLEGION FALCON	24 SERIES, 2923 MULLION

Hardware Set No. 2 - Passage

Item	Manufacturer	Catalog No.
LATCHSET	ACOUSTICAL SURFACES	PASSAGE LEVER, TORINO STYLE LEVER, DARK BRONZE
HINGES SILENCERS BALL CATCH PUSH PLATE KICK PLATE KICK STOP CLOSER	ACOUSTICAL SURFACES	HARDWARE BY MANUFACTURE, DARK BRONZE
THRESHOLD	ACOUSTICAL SURFACES	ADA COMPLIANT. HARDWARE BY MANUFACTURE, DARK BRONZE

Hardware Set No. 3 - Privacy

Item	Manufacturer	Catalog No.
LOCKSET	SCHLAGE	AL10S SERIES, PRIVACY LATCH, LATITUDE STYLE LEVER, 350 AGED BRONZE
HINGES	STANLEY	CB1960R 4 1/2" x 4 1/2", BRONZE, 1 1/2 PAIR PER DOOR (TYP)
SILENCERS	GLYNN JOHNSON	GJ-64, AS REQUIRED
DOOR STOP	IVES	436 OR 438 FLOOR MOUNTED VERIFY IN FIELD, AGED BRONZE
CLOSER	LCN	1460 – 1 REQUIRED, NON HOLD OPEN, 695 DARK BRONZE

Hardware Set No. 4 - Classroom

Item	Manufacturer	Catalog No.
LOCKSET	SCHLAGE	AL10S SERIES, CLASSROOM LATCH, LATITUDE STYLE LEVER, 350 AGED BRONZE
HINGES	STANLEY	CB1960R 4 1/2" x 4 1/2", BRONZE, 1 1/2 PAIR PER DOOR (TYP)
SILENCERS	GLYNN JOHNSON	GJ-64, AS REQUIRED
DOOR STOP	IVES	436 OR 438 FLOOR MOUNTED VERIFY IN FIELD, AGED BRONZE
KICK DOWN HOLDER	IVES	FS452, AGED BRONZE

Hardware Set No. 5 - Store Room

Item	Manufacturer	Catalog No.
LOCKSET	SCHLAGE	AL10S SERIES, STORE ROOM LATCH, LATITUDE STYLE LEVER, 350 AGED BRONZE
HINGES	STANLEY	CB1960R 4 1/2" x 4 1/2", BRONZE, 1 1/2 PAIR PER DOOR (TYP)
SILENCERS	GLYNN JOHNSON	GJ-64, AS REQUIRED
DOOR STOP	IVES	436 OR 438 FLOOR MOUNTED VERIFY IN FIELD, AGED BRONZE
CLOSER	LCN	1460 – 1 REQUIRED, NON HOLD OPEN, 695 DARK BRONZE

Hardware Set No. 6 - Store Room + Panic Bar

Item	Manufacturer	Catalog No.
LOCKSET	SCHLAGE	AL10S SERIES, STORE ROOM LATCH, LATITUDE STYLE LEVER, 350 AGED BRONZE
HINGES	STANLEY	CB1960R 4 1/2" x 4 1/2", BRONZE, 1 1/2 PAIR PER DOOR (TYP)
SILENCERS	GLYNN JOHNSON	GJ-64, AS REQUIRED
DOOR STOP	IVES	436 OR 438 FLOOR MOUNTED VERIFY IN FIELD, AGED BRONZE
CLOSER	LCN	1460 – 1 REQUIRED, NON HOLD OPEN, 695 DARK BRONZE
PANIC BAR	ALLEGION FALCON	24-R-L PANIC RIM EXIT DEVICE ENTRANCE BY LEVER, KEY LOCKS OR UNLOCKS KNOB, 299 STRIKE, US11 AGED BRONZE

Hardware Set No. 7 - Touch to Open

Item	Manufacturer	Catalog No.
LATCH	HAFELE	ML-ZN80 HEAVY DUTY MAGNETIC PUSH TO OPEN LATCH, 246.65.731 WHITE,
HINGES	HAFELE	HEZ3D CONCEALED HINGE, 3-WAY ADJUSTMENT, 924.18.015 WHITE

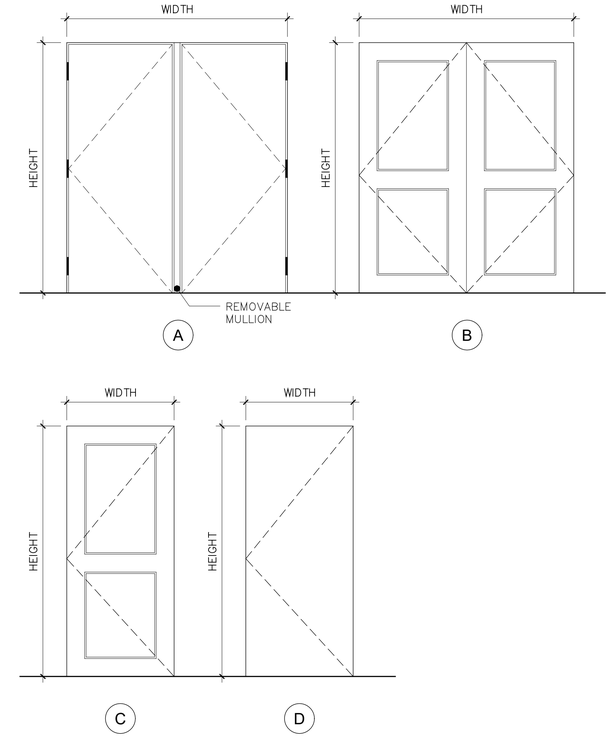

1 A6.01 Typical Door Type Details

Scale: 1/2" = 1'-0"

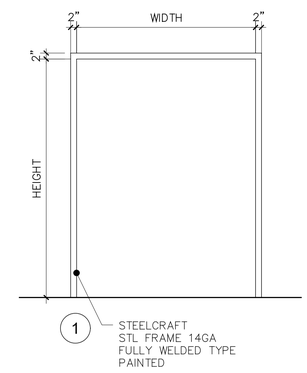

2 A6.01 Typical Frame Type Details

Scale: 1/2" = 1'-0"

DOOR NOTES:

1. ALL BASIS OF DESIGN SPECIFICATIONS SHALL BE PROVIDED AS SPECIFIED OR AS AN APPROVED EQUAL BY OWNER / ARCHITECT.
2. ALL FIRE-RATED DOORS SHALL BE PROVIDED WITH SMOKE SEALS AND SELF-CLOSING HARDWARE.
3. GC SHALL FIELD VERIFY CONDITIONS AND PREPARE SHOP DRAWINGS FOR ARCHITECT REVIEW & APPROVAL PRIOR TO FABRICATION.
4. ALL EXTERIOR DOOR THRESHOLDS SHALL BE ADA COMPLIANT AND SHALL NOT EXCEED 0.5-INCH IN HEIGHT. ANY TRANSITIONS BETWEEN 0.25-INCH AND 0.5-INCH SHALL BE PROVIDED WITH A BEVELED SURFACE WITH A SLOPE NOT EXCEEDING 1 UNIT VERTICAL IN 2 UNITS HORIZONTAL.
5. THE AMOUNT OF FORCE REQUIRED TO RELEASE A DOOR LATCH SHALL NOT EXCEED 15 POUNDS AND THE AMOUNT OF FORCE REQUIRED TO SET A DOOR IN MOTION SHALL NOT EXCEED 30-POUNDS.
6. ALL HARDWARE SHALL BE ADA/ ANSI 117.1 COMPLIANT AND SHALL NOT REQUIRE TIGHT GRASPING, TIGHT PINCHING OR TWISTING OF THE WRIST TO OPERATE UNLESS FOR SECURITY PURPOSES ONLY AND NOT USED FOR NORMAL OPERATION.
7. DOOR CLOSER SPEEDS SHALL BE ADJUSTED SO THAT FROM AN OPENING POSITION OF 90 DEGREES THE TIME REQUIRED TO MOVE THE DOOR FROM A POSITION OF 12 DEGREES FROM THE LATCH IS 5 SECONDS MINIMUM.

JTA
JOSEPH THOMPSON ARCHITECT

Joseph G. Thompson Architect, PLLC
108 N Division Street, Suite 100
Peekskill, New York 10566

PH: (845)532-8156
EM: jgthompsonarchitect@gmail.com

NOTES:

IT IS A VIOLATION OF THE LAW FOR ANY PERSON, UNLESS ACTING UNDER THE DIRECTION OF A LICENSED ARCHITECT OR ENGINEER, TO ALTER AN ITEM IN ANY WAY. IF AN ITEM BEARING THE SEAL OF AN ARCHITECT OR ENGINEER IS ALTERED, THE ALTERING ARCHITECT OR ENGINEER SHALL AFFIX TO HIS ITEM THE SEAL AND THE NOTATION "ALTERED BY" FOLLOWED BY HIS SIGNATURE AND THE DATE OF SUCH ALTERATION, AND A SPECIFIC DESCRIPTION OF THE ALTERATION.

DO NOT SCALE DRAWINGS. WRITTEN DIMENSIONS GOVERN.

© JOSEPH G THOMPSON ARCHITECT, PLLC ALL RIGHTS RESERVED.

REGISTERED ARCHITECT JOSEPH G. THOMPSON 036057 STATE OF NEW YORK

SEAL

Joseph G. Thompson, RA
New York State License #036057
Expiration: August 31, 2027

PARAMOUNT HUDSON VALLEY THEATER & ARTS CENTER

Paramount Hudson Valley
1008 Brown Street
Peekskill, New York 10566
SBL: 32.19-4-12
City of Peekskill- Westchester County

BID Review Document - NOT FOR PERMIT OR CONSTRUCTION

Date: May 23, 2025

Revisions:

A6.01